HARSLE

ENDEAVOR TO LEAD
METAL-WORKING
MACHINE INDUSTRY

WWW.HARSLE.COM

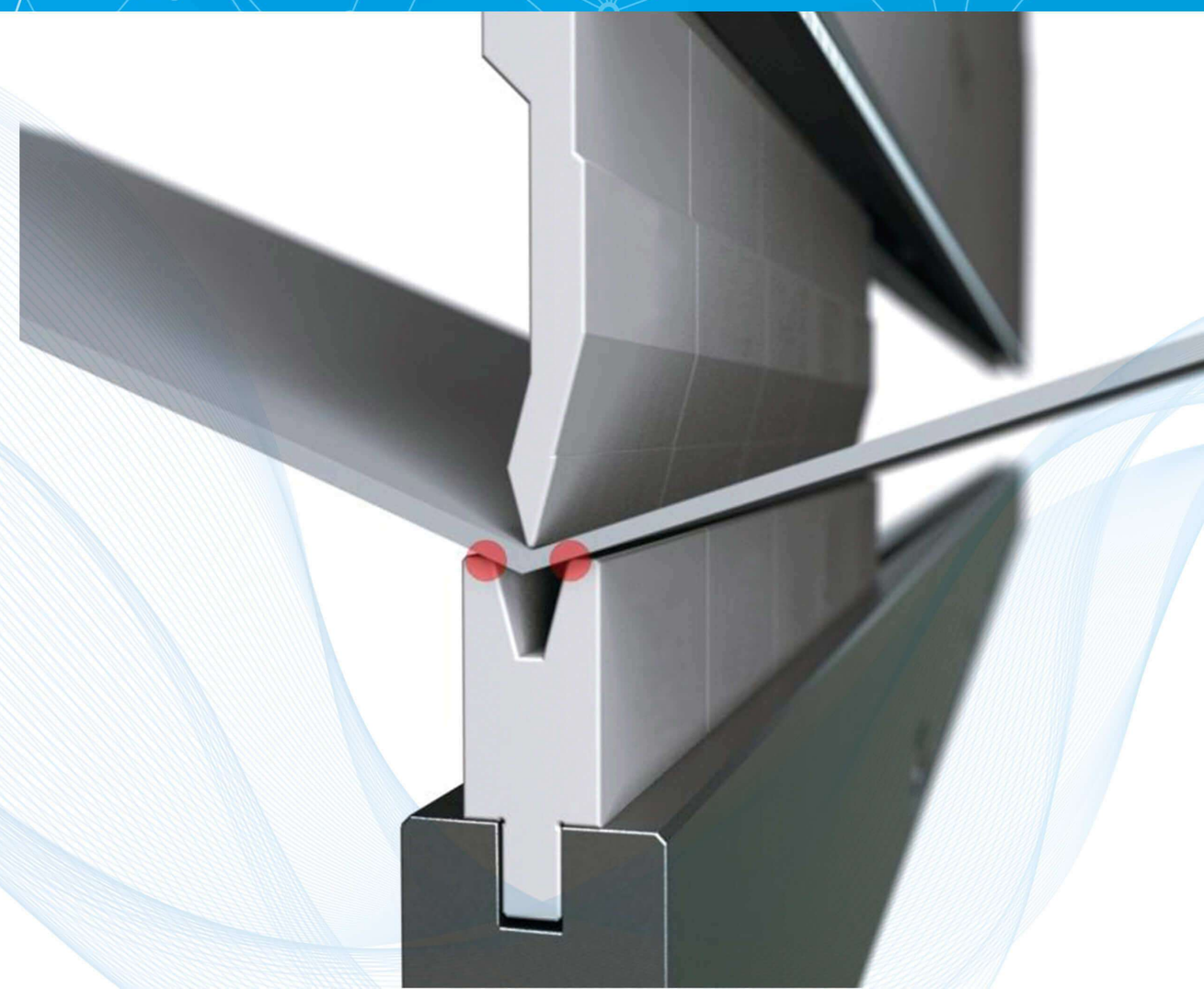

HARSLE

Tel: +86-25-56200956
Fax: +86-25-57260217
Https://www.harsle.com
E-mail: info@harsle.com
WhatsApp: 0086-18052080815
Add: Mingjue Industrial Park, Lishui, Nanjing, Jiangsu, China

COMPANY PROFILE

Nanjing Harsle Machine Tool Co.,Ltd. is a modern enterprise which manufactures various kinds of NC and CNC press brake, shearing machine, hydraulic press, power press, Ironworker. The company has a number of better educated, younger workers who devote themselves to developing and designing sheet metal processing machines, production department applies CAD, CAPP, PDM and other CAD software to the field of product upgrading, which enables the team has strong designing capability, adopt advanced international management mode and introduce German machinery technology. That is the reason why our product quality moves to a higher level constantly.

HARSLE always adhere to the business principle of “making better machine, providing first class service” , and constantly increase the readjustment of product structure. Company's main products include: WE67K series CNC sheet metal Press brake, QC12K Series CNC Hydraulic Swing Beam Shear, WC67K series hydraulic sheet metal bending machine, QC11K Series hydraulic guillotine shearing machine, J23/J21S Series Power Press, Y32 series and other hydraulic press, Hydraulic press machine, Q35Y series Ironworker and other products widely used in decoration, metallurgy, shipbuilding, automobiles, machinery, aviation and other specialized areas of production. To meet customers’ special requirements for the products, our company is willing to personalize you customized products.

HARSLE is located in special economic zones of the ancient capital in Nanjing. Various types of mechanical engineers which account for more than 30% of employees devote to R & D, production and sales. HARSLE sets up over 30 offices in major cities across the country which provide customers with convenient services, we will be in the spirit of "good faith, collaborative, pragmatic, innovative" to forge ahead with determination, and willing to work with friends from all over the world faithful以create brilliance together.

Products have extended the applied field to the duct manufacturing, automobile industry, container production, material making industry, metal household appliances, furniture and decorative engineering and other industries. In these industries, Harsle products have been trusted widely, because we believe that: only assure outstanding product quality and good after-sales service which can enable customers to believe us faithfully.

PRODUCTION EQUIPMENT

MACHINE INVENTORY

EXHIBITIONS SHOW

Russia Exhibition

Thailand Exhibition

India Exhibition

CERTIFICATE

We are always on the way and never stop…

When the splendid yesterday has passed, we pau more attention to the future growth. We will, as always, put our product quality first, and supervise strictly every aspect of production, to provide more reliable products. HARSLE is wonderful because of you!

CUSTOMER FEEDBACK

CUSTOMER VISIT

HARSLE

CONTENTS

PRESS BRAKE

▪	WE67K Genius Press Brake	01
▪	WE67K Smart Press Brake	03
▪	Hybrid CNC Press Brake	09
▪	WC67K Econom Press Brake	11

SHEARING MACHINE

▪	QC12Y/K swing beam shearing machine	13
▪	QC11Y/K hydraulic guillotine shearing machine	15
▪	Q11 mechanical shearing machine	17
▪	Q11D electric shearing machine	18

PUNCHINE MACHINE

▪	J21S deep-throat power press	19
▪	J23 power press	20
▪	JH21 pneumatic punching machine	21

HYDRAULIC PRESS

▪	Steel door embossing machine	22
▪	Y27 single action sheet drawing hydraulic press	23
▪	Y32 four-column hydraulic press	25
▪	Y41 single column hydraulic press	27
▪	YL gantry hydraulic machine	28

LASER CUTTING MACHINE

▪	CNC Fiber laser cutting machine	29
▪	Closed type CNC Fiber laser cutting machine	31

IRONWORK

▪	Q35Y hydraulic ironworker	33

NOTCHING MACHINE

▪	QF28Y fixed angle hydraulic notchine machine	34
▪	QX28Y adjustable angle hydraulic notching machine	34

PRESS BRAKE · WE67K Genius

Standard Configuration

Main motor

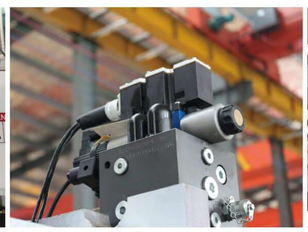
Proportional valve

Fast clamp

CNC crowning

DA-66T Controller

- 2D touch graphical programming
- 3D product graphic simulation shows
- 17"high resolution TFT color screen
- Full Windows application package
- Compatible DELEM modular structure
- Multi-Axis available

Optional Configurations

Robotic Arm

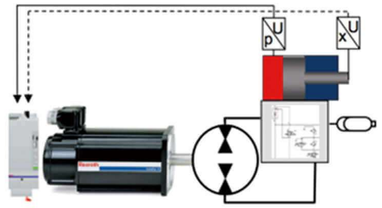
Servo pump unit

Offline software

Offline software offers a number of other powerful features, such as an auto tooler, which will select the appropriate tooling to be used according to the machine type and 3D model, thus generating a collision free bending sequence. A fully animated bend simulator with collision checks allows the operator to inspect and correct in detail the detected collisions, thanks to the graphic interface. Graphic tool layouts allow modifications to be made with ease to tooling, and bend reports provide 3D views of each bend. The back gauges can also be viewed in the 3D visual presentation window; changes to their positions can therefore easily be made.

Optional controller

DA-69T(DELEM)

ModEva Pac(Cybelec)

ModEva 15T(Cybelec)

ModEva RA(Cybelec)

S640(Italy ESA)

S650(Italy ESA)

TEL: +86-25-57269018 FAX: +86-25-57260217 E-MAIL: info@harsle.com

CNC Backgauge

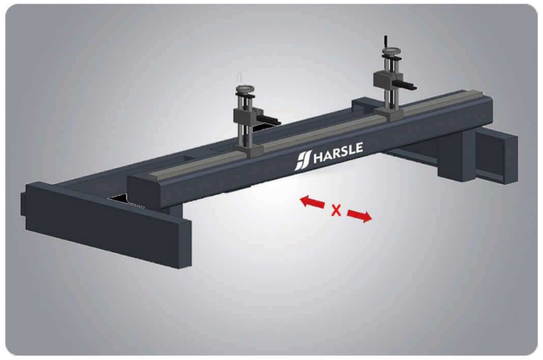

1-AXIS BACKGAUGE (X)

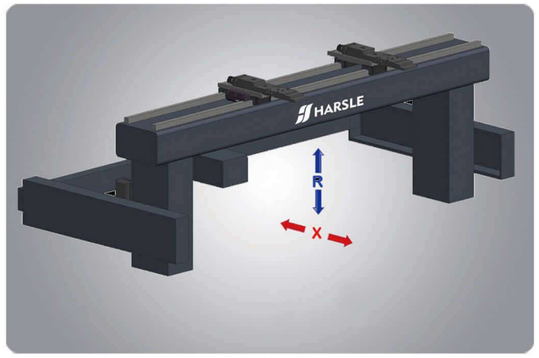

2-AXIS BACKGAUGE (X,R)

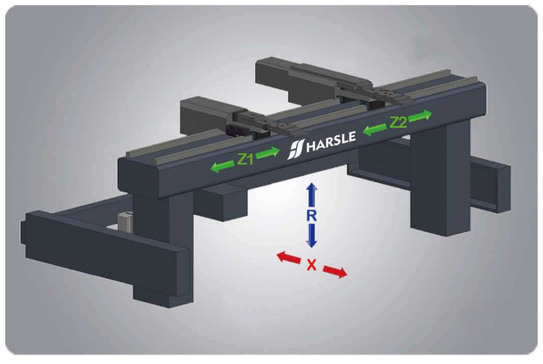

4-AXIS BACKGAUGE (X,R,Z1,Z2)

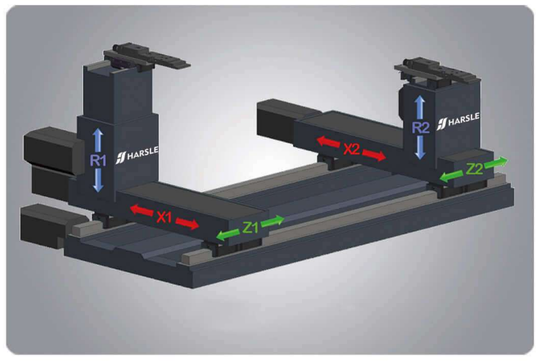

6-AXIS BACKGAUGE
(X1,X2,R1,R2, Z1,Z2)

Axes	X1(X)	X2	R1(R)	R2	Z1	Z2
Stroke(mm)	500	500	200	200	/	/
Speed(mm/s)	500	500	500	500	2000	2000
Accuracy(mm)	0.01	0.01	0.01	0.01	0.05	0.05
Motor	Servo Drive	Servo Drive	Servo Drive	Servo Drive	Servo Drive	Servo Drive
Mechanical system	Ball screw	Ball screw	Ball screw	Ball screw	Rack	Rack

Sorry for no notice if parameter will change!

PRESS BRAKE · WE67K Smart

Standard Configuration

Movable front support

CNC crowning

Z stopper

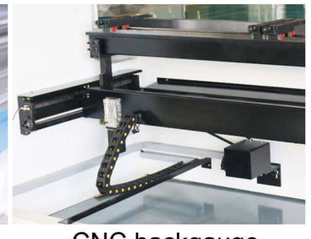

CNC backgauge

DA-52S Controller

- 7” widescreen color LCD
- Crowning system control
- Date backup/ restore via USB
- Bending tool/material/product library
- Automatic bending angle calculation
- Up to 24 languages for selection
- Up to 4 axes (Y1,Y2,and 2 auxiliary axes)
- Advanced Y-axis control algorithms for closed and open loop valves

Optional configuration

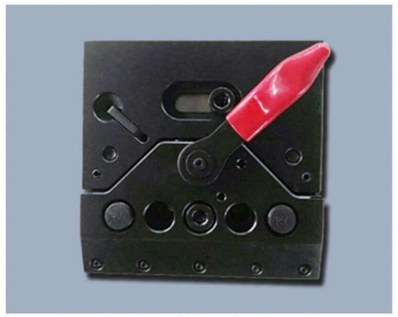

AMADA Clamps

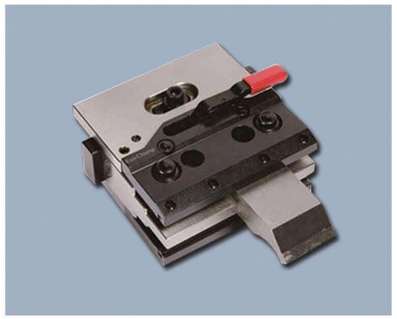

KYOKKO Clamps

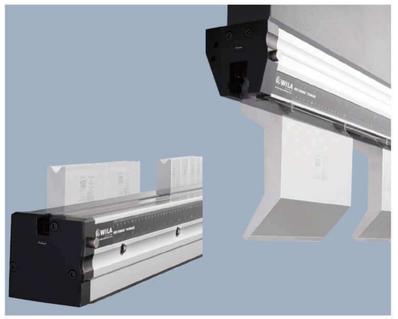

Hydraulic Clamps

Hydraulic Oil Cooler

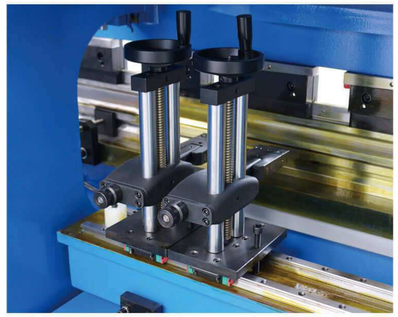

Adjustable Z Stopper

Laser Protector

Optional configuration

DA-58T(DELEM)

DA-56S(DELEM)

CybTouch8

CybTouch12

S 530(Italy ESA)

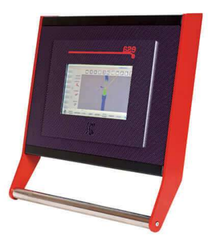

S 630(Italy ESA)

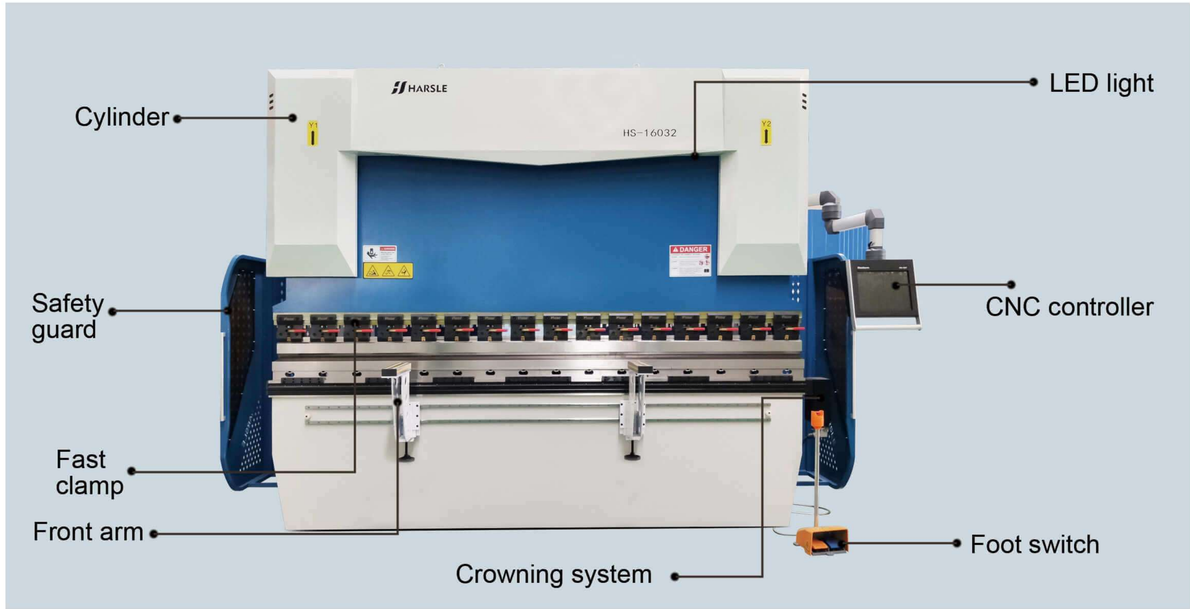

CNC Backgauge

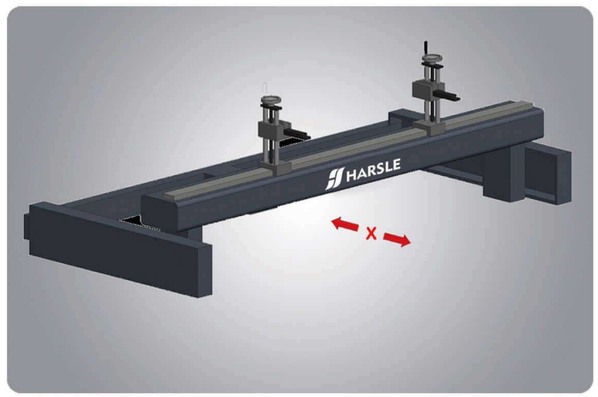

1-AXIS BACKGAUGE (X)

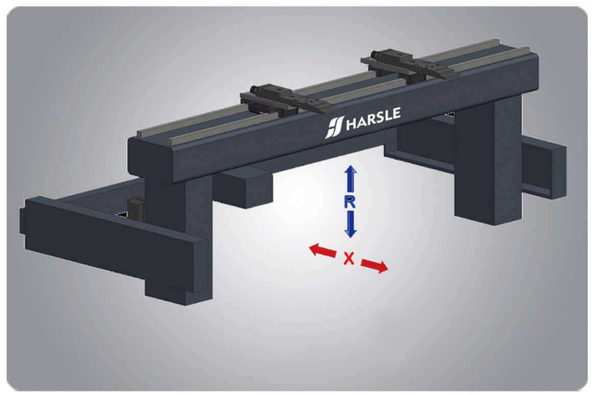

2-AXIS BACKGAUGE (X,R)

TEL: +86-25-57269018 FAX: +86-25-57260217 E-MAIL: info@harsle.com

Crowning system

The stress can cause the ram and worktable some deformation during the process of bending; the crowning system can make relevant compensation to the ram deformation, which improves the precision of press brake by a wide margin. It is specially applied to make some high precision products such as stainless steel.

Motorized crowning

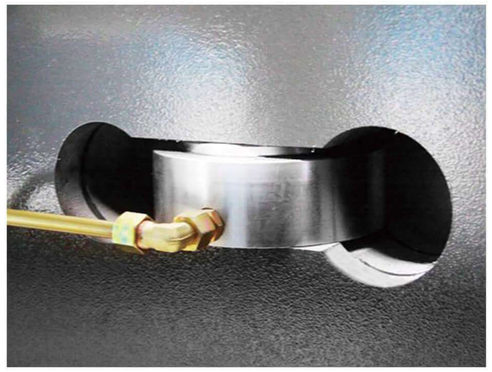

Hydraulic crowning

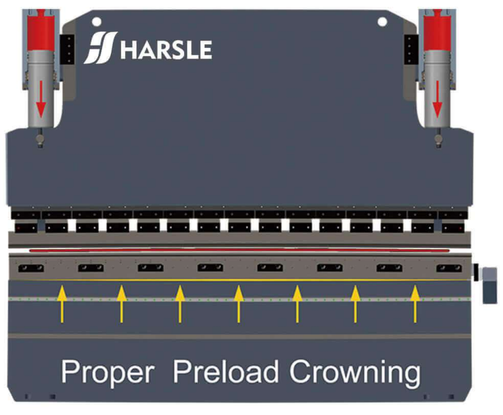

Concave

Convex

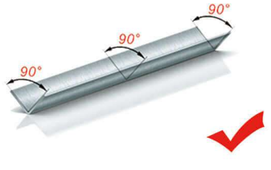

WE67K technical parameters

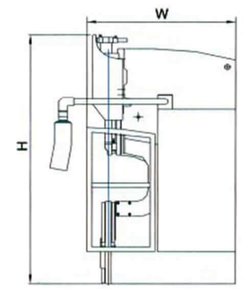

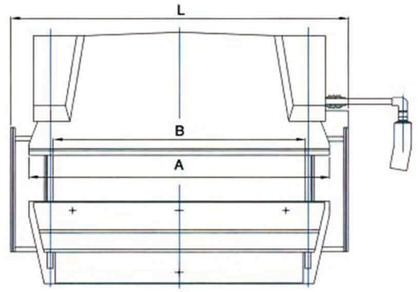

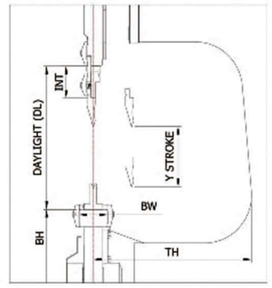

Type		WE67K-63T/2500	WE67K-80T/3200	WE67K-100T/3200	WE67K-160T/3200	WE67K-200T/3200	WE67K-250T/3200	WE67K-320T/3200
Nominal Force		630KN	800KN	1000KN	1600KN	2000KN	2500KN	3200KN
Bending Length		2500mm	3200mm	3200mm	3200mm	3200mm	3200mm	3200mm
Column Distance		1900mm	2700mm	2700mm	2700mm	2700mm	2700mm	2700mm
Throat Depth		350mm	350mm	400mm	400mm	400mm	400mm	400mm
Slider Travel		170mm	170mm	200mm	200mm	200mm	200mm	200mm
Worktable Height		800mm	800mm	800mm	800mm	800mm	800mm	800mm
Die loading Height		380mm	380mm	420mm	420mm	380mm	420mm	420mm
Power		5.5kw	7.5kw	7.5kw	11kw	15kw	15kw	18.5kw
Dimension	Length	3100mm	3500mm	3500mm	3500mm	3500mm	3500mm	3500mm
	Width	1450mm	1550mm	1580mm	1650mm	1680mm	1700mm	1800mm
	Height	2050mm	2100mm	2400mm	2500mm	2550mm	2600mm	2730mm

Type		WE67K-400T/4000	WE67K-500T/5000	WE67K-500T/6000	WE67K-500T/7000	WE67K-600T/5000	WE67K-600T/6000	WE67K-600T/7000
Nominal Force		4000KN	5000KN	5000KN	5000KN	6000KN	6000KN	6000KN
Bending Length		4000mm	5000mm	6000mm	7000mm	5000mm	6000mm	7000mm
Column Distance		3500mm	3900mm	4900mm	5900mm	3900mm	4900mm	5900mm
Throat Depth		400mm	500mm	500mm	500mm	500mm	500mm	500mm
Slider Travel		200mm	320mm	320mm	320mm	320mm	320mm	320mm
Worktable Height		800mm	800mm	800mm	800mm	800mm	800mm	800mm
Die loading Height		420mm	600mm	600mm	600mm	600mm	600mm	600mm
Power		22.5kw	37kw	37kw	37kw	45kw	45kw	45kw
Dimension	Length	4300mm	5400mm	6500mm	7500mm	5500mm	6500mm	7500mm
	Width	2080mm	2525mm	2525mm	2525mm	2450mm	2450mm	2450mm
	Height	2730mm	4600mm	4200mm	4900mm	4500mm	5100mm	5200mm

Type		WE67K-800T/6000	WE67K-800T/7000	WE67K-800T/8000	WE67K-1000T/6000	WE67K-1000T/7000	WE67K-1000T/8000	WE67K-1200T/6000	WE67K-1200T/7000	WE67K-1200T/8000	WE67K-1600T/6000	WE67K-1600T/7000	WE67K-1600T/8000
Nominal Force		8000KN	8000KN	8000KN	10000KN	10000KN	10000KN	12000KN	12000KN	12000KN	16000KN	16000KN	16000KN
Bending Length		6000mm	7000mm	8000mm	6000mm	7000mm	8000mm	6000mm	7000mm	8000mm	6000mm	7000mm	8000mm
Column Distance		4900mm	5900mm	5900mm	5900mm	5900mm	6900mm	4900mm	5900mm	6900mm	4900mm	5900mm	6900mm
Throat Depth		600mm	600mm	600mm	600mm	600mm	600mm	600mm	600mm	600mm	500mm	500mm	500mm
Slider Travel		420mm	420mm	420mm	420mm	420mm	420mm	420mm	420mm	420mm	320mm	320mm	320mm
Worktable Height		800mm	800mm	800mm	800mm	800mm	800mm	800mm	800mm	800mm	800mm	800mm	800mm
Worktable Width		300mm	300mm	300mm	300mm	300mm	300mm	300mm	300mm	300mm	300mm	300mm	300mm
Die loading Height		600mm	600mm	600mm	600mm	600mm	600mm	600mm	600mm	600mm	600mm	600mm	600mm
Power		74kw	74kw	74kw	90kw	90kw	90kw	90kw	90kw	90kw	110kw	110kw	110kw
Dimension	Length	6500mm	7500mm	8500mm	6500mm	7500mm	8500mm	6500mm	7500mm	8500mm	6500mm	7500mm	8500mm
	Width	2750mm	2750mm	2750mm	2800mm	2800mm	2800mm	3100mm	3100mm	3100mm	3300mm	3300mm	3300mm
	Height	5300mm	5500mm	5900mm	5600mm	5800mm	6100mm	5850mm	6550mm	7150mm	6500mm	7000mm	8000mm

Sorry for no notice if parameter will change!

HYBRID CNC PRESS BRAKE

CNC controller

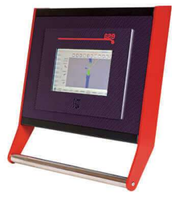

ESA-S630

ESA-S640

Cybelec-CT12

DELEM-DA58T

DELEM-DA66T

Feartures

- Plug & Work - Reduced assembly and start-up times due to completely preassembled and tested actuator.
- Fast - increased performance up to 30% by reducing the cycle time (shorter ramp times)
- Precise - up to 5 µm positioning accuracy.
- Up to 7,000 operating hours and after this significantly longer maintenance cycles as standard systems.
- Higher energy efficiency compared to conventional electro- hydraulic and electromechanical solutions.
- Phenomenal reduced noise development in all operating modes.
- Higher stiffness and controllability due to internal initial pressure.
- Piping free.
- Reduced temperature dependence.
- Considerably reduced tank volume (up to 95%).
- High reliability through compact, closed system.
- Easy to use in application (no hydraulic expertise necessary).

Introduction

It is an electrohydraulic system which combines the advantages of both drive technologies: Unlike an electric drive, it is power-ful and durable thanks to hydraulics, but owing to the compact closed design dispenses with oil lines, making it clean and leak-free to operate, because all the components, including the tank system, are compactly integrated in the system.
The system translates the electrical input from the machine controller (CNC) in to mechanical linear motion. To accom-plish this, the machine controller communicates with the axis controller and subsequently with the motor controller. The synchronized actuators follow preselected profiles, consisting of a working motion or a rapid motion and working motion, using controlled tracing. The drive controls the position of the bending tool - and its force during stamping - with a speed-variable motor-pump unit.

Control principle

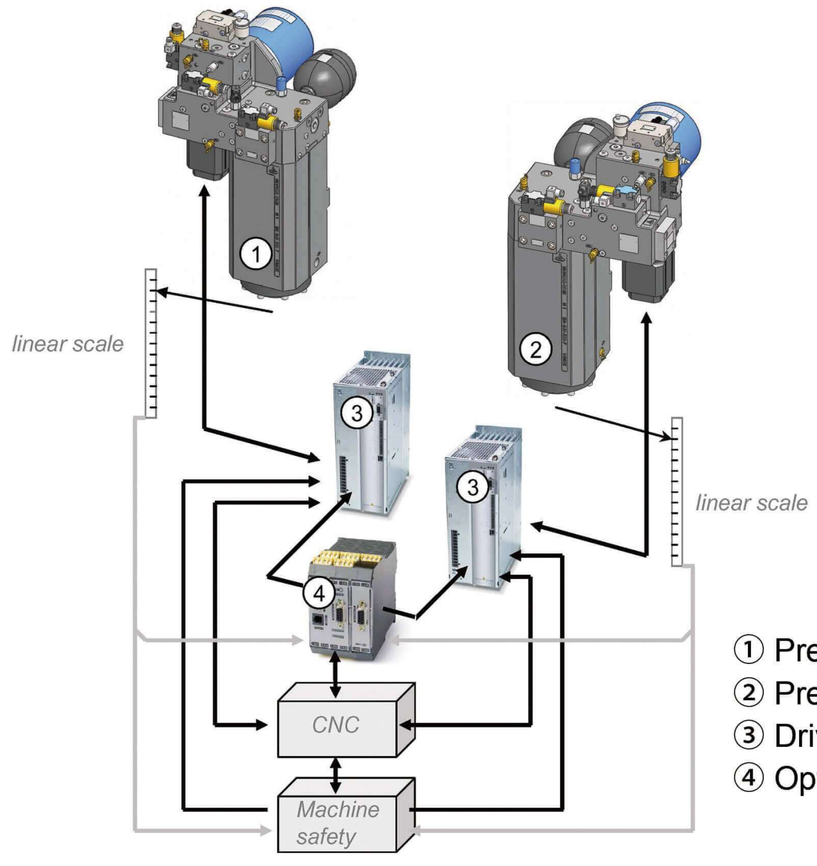

① Press drive left
② Press drive right
③ Drive controller right/left
④ Option safety control

PRESS BRAKE · WC67K Econom

E21 Controller

- Backgauge and ram control
- Workpiece counting
- Store 40 programs
- 25 steps for each program
- Bending retract function
- Chinese/English
- mm/inch Unit

Standard configuration

Inverter

Tubing connector

Manual R axis

Stop finger

Optional configurations

Quick clamp

Light curtain

Manual compensation

Servo motor

HARSLE

Optional controller

DA-41S(Delem)

CybTouch 6 (Cybelec)

TP10

E300

Technical parameters

Type	Nominal Force (KN)	Worktable Length (mm)	Poles Distance (mm)	Throat Depth (mm)	Slider Travel (mm)	Max Open (mm)	Power (KW)	Dimension LxWxH(mm)
40T/2200	400	2200	1875	230	100	320	5.5	2200x1200x1910
40T/2500	400	2500	1875	230	100	320	5.5	2500x1200x1910
50T/2500	500	2500	1875	230	100	320	5.5	2500x1210x2000
63T/2500	630	2500	2020	250	100	320	5.5	2500x1300x2210
63T/3200	630	3200	2575	250	100	320	5.5	3200x1300x2210
80T/2500	800	2500	2020	300	100	320	7.5	2500x1400x2300
80T/3200	800	3200	2590	320	100	350	7.5	3200x1500x2300
80T/4000	800	4000	3050	320	100	350	7.5	4000x1500x2400
100T/2500	1000	2500	2020	320	120	320	7.5	2500x1600x2400
100T/3200	1000	3200	2600	320	120	370	7.5	3200x1600x2600
100T/4000	1000	4000	3050	320	120	370	7.5	4000x1600x2700
125T/3200	1250	3200	2600	320	120	370	7.5	3200x1600x2600
125T/4000	1250	4000	3050	320	120	370	7.5	4000x1600x2700
160T/3200	1600	3200	2600	320	200	460	11	3200x1700x2700
160T/4000	1600	4000	3000	320	200	460	11	4000x1700x2800
160T/5000	1600	5000	4000	320	200	460	11	5000x1900x3100
160T/6000	1600	6000	4940	320	200	460	11	6000x1900x3200
200T/3200	2000	3200	2600	320	200	460	11	3200x1950x2800
200T/4000	2000	4000	3000	320	200	460	11	4000x1950x2800
200T/5000	2000	5000	4000	320	200	460	11	5000x1950x3000
200T/6000	2000	6000	5000	320	200	460	11	6000x1950x3300
250T/3200	2500	3200	2500	400	250	590	18.5	3200x2000x3200
250T/4000	2500	4000	3000	400	250	590	18.5	4000x2000x3400
250T/5000	2500	5000	4000	400	250	590	18.5	5000x2000x3400
250T/6000	2500	6000	5000	400	250	590	18.5	6000x2000x3400
300T/3200	3000	3200	2530	400	250	590	22	3200x2000x3450
300T/4000	3000	4000	3000	400	250	590	22	4000x2000x3450
300T/5000	3000	5000	4000	400	250	590	22	5000x2000x3450
300T/6000	3000	6000	5000	400	250	590	22	6000x2000x3450
400T/4000	4000	4000	3000	400	250	590	30	4000x2180x3400
400T/5000	4000	5000	4000	400	250	590	30	5000x2180x3500
400T/6000	4000	6000	5000	400	250	590	30	6000x2180x3800
500T/5000	5000	5000	4000	400	250	590	45	5000x3500x3700
500T/6000	5000	6000	5000	400	320	590	45	6000x3500x3700
600T/4000	6000	4000	3000	400	320	590	55	4000x4500x3700
600T/6000	6000	6000	5000	400	320	590	55	6000x4500x3700
800T/6000	8000	6000	5000	400	320	590	55	6000x4500x6000

Sorry for no notice if parameter will change!

QC12Y/K SWING BEAM SHEARING MACHINE

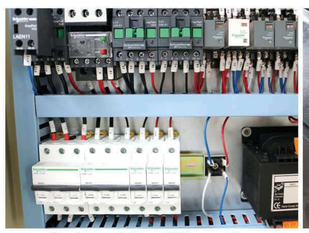
Schneider Electric

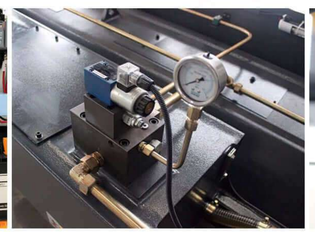
Hydraulic Valve

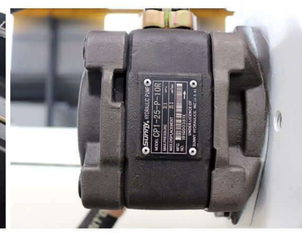
Oil Pump

Knife Gap Adjustment

Features

- The motors for backgauge are controlled by inverter, which can achieve high positioning accuracy 0.05mm of the backguage by changing the frequency and voltage of motor.
- Top blade with two cutting edges and bottom blade with four cutting edges (6CrW2si).
- x axis(Backgauge) and cutting time can be programmed by E21S system controller,which can store up to 40 groups of programs.
- Hydraulic overload can be protected by overflow valve knife rack returns by Nitrogen cylinders.
- Foot switch with emergency button can stop the machine immediately when accident happens.
- Adjusting knife gap between upper and bottom blades can achieve better cutting performance.
- Front arms with ruler and roll balls can ensure the cutting accuracy and feed the material easily..

E21S controller

- Backgauge(X axis) movement control
- Control AC motor or inverter
- Intelligent and unilateral positioning
- Work-piece counting function
- Language for Chinese/English
- Unit for mm/inch
- Double programmable digital output
- One key back-up/restore of parameters
- 40 programs stored, 25 steps per program

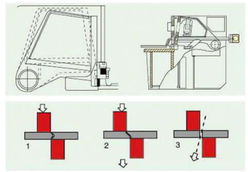

Schematic

Reasonable blade gap can get better cutting result. Quick manual knife gap adjustment can get the right knife gap according to the cutting thickness of the material from the reference chart.

Technical parameters

TYPE	Cutting Thickness (mm)	Cutting Length (mm)	Cutting Angel (°)	Materail Strength (KN/CM)	Backgauge Range (mm)	Stroke Times (mm⁻¹)	Power (kw)	Dimension LxWxH(mm)
4x2500	4	2500	1°30‘	≤450	20-500	16	5.5	3040x1550x1550
4x3200	4	3200	1°30‘	≤450	20-500	13	5.5	3840x1550x1550
4x4000	4	4000	1°30‘	≤450	20-600	10	5.5	4600x1700x1700
4x6000	4	6000	1°30‘	≤450	20-800	5	7.5	6460x2100x3200
6x2500	6	2500	1°30‘	≤450	20-500	15	7.5	3040x1710x1620
6x3200	6	3200	1°30‘	≤450	20-500	12	7.5	3840x1710x1620
6x4000	6	4000	1°30‘	≤450	20-600	9	7.5	4620x1850x1700
6x5000	6	5000	1°30‘	≤450	20-600	8	7.5	5410x1710x1620
6x6000	6	6000	1°30‘	≤450	20-800	5	11	6480x2100x2300
8x2500	8	2500	1°30‘	≤450	20-500	11	7.5	3040x1700x1700
8x3200	8	3200	1°30‘	≤450	20-500	8	7.5	3860x1700x1700
8x4000	8	4000	1°30‘	≤450	20-600	8	7.5	4640x1700x1700
8x5000	8	5000	1°30‘	≤450	20-600	8	7.5	5400x2400x2000
8x6000	8	6000	1°30‘	≤450	20-800	8	11	6480x2100x2350
10x2500	10	2500	1°30‘	≤450	20-500	10	11	3040x1800x1700
10x3200	10	3200	1°30‘	≤450	20-500	10	11	3860x2000x1700
10x4000	10	4000	1°30‘	≤450	20-600	10	11	4650x2100x2000
10x6000	10	6000	1°30‘	≤450	20-800	10	15	6500x2100x2300
12x2500	12	2500	2°	≤450	20-600	12	18.5	3140x2050x2000
12x3200	12	3200	2°	≤450	20-600	10	18.5	3880x2150x2000
12x4000	12	4000	2°	≤450	20-600	10	18.5	4680x2150x2100
12x5000	12	5000	2°	≤450	20-600	6	18.5	3245x1900x1900
12x6000	12	6000	2°	≤450	20-1000	5	18.5	6900x2600x2700
16x2500	16	2500	2°30‘	≤450	20-600	10	18.5	3140x2150x2000
16x3200	16	3200	2°30‘	≤450	20-600	10	18.5	3880x2150x2000
16x4000	16	4000	2°30‘	≤450	20-800	10	18.5	4650x2150x2200
16x5000	16	5000	2°	≤450	20-1000	6	18.5	5900x2600x2700
16x6000	16	6000	2°	≤450	20-1000	5	22	6900x2700x2700
20x2500	20	2500	3°	≤450	20-800	8	22	3440x2300x2500
20x3200	20	3200	3°	≤450	20-800	8	22	4150x2350x2700
20x4000	20	4000	3°	≤450	20-1000	5	22	4850x2600x2400
20x6000	20	6000	3°	≤450	20-1000	4	22	6700x3000x3000
25x2500	25	2500	3°	≤450	20-1000	8	37	3200x2700x2900
25x3200	25	3200	3°	≤450	20-1000	5	37	4200x2400x2500
30x2500	30	2500	3°	≤450	20-1000	4	37	3300x2900x3000
30x3200	30	3200	3°30’	≤450	20-1000	4	40	4200x2500x2600
40x2500	40	2500	4°	≤450	20-1000	3	75	3200x3300x3200
40x3200	40	3200	4°	≤450	20-1000	3	90	4300x3300x3000

Sorry no notice if parametre change!

QC11Y/K HYDRAULIC GUILLOTINE SHEARING MACHINE

Front Arms

Pneumatic Back Carrier
(optional)

Servo Motor
(optional)

Front Feeder
(optional)

Features

- Vertical cutting can achieve higher performance and strength.
- Top blade with four cutting edges and bottom blade with four cutting edges (6CrW2si).
- X axis(Backgauge) and cutting time can be programmed by E21S system controller,which can store up to 40 groups of programs.
- Cutting angle can be adjusted by CNC controller, Blade gap can be motorized controlled.
- Hydraulic overload can be protected by overflow valve, knife rack returns by Nitrogen cylinders.
- Foot switch with emergency button can stop the machine immediately when accident happens.
- Front arms with ruler and roll balls can ensure the cutting accuracy and feed the material easily.

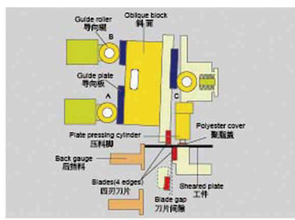

Three Trolley and Rail Structure

The front preloading rail forces blade holder to move repeatedly along upper rail and down rail with no gaps. For line shearing results, the blade gap could be adjusted for various plates.

Controller

P40(optional)

- LCD Display
- Multi-Language
- Manual inching function
- Single set operation
- Program memory
- Made in Germany
- Cutting angle and knife gap control

DAC 360S(optional)

- The panel control, high brightness LCD screen
- Block material control,after concession functions
- Shearing angle control,shear clearance control
- Shear travel control,pressure control
- The axis can be manual movement

E21S

- Backgauge(X axis) movement control
- Control AC motor or inverter
- Intelligent and unilateral positioning
- Work-piece counting function
- Language for Chinese/English
- Unit for mm/inch
- Double programmable digital output
- One key back-up/restore of parameters
- 40 programs stored, 25 steps per program

Technical parameters

Specification	Shearing Thickness (mm)	Shearing Width (mm)	Stroke Times (mm⁻¹)	Backgauge Rang (mm)	Shearing Angler (°)	Main Power kw	Overall Dimension LxWxH(mm)
6x2500	6	2500	16-35	20-600	30'-1°30'	7.5	3200x1500x2100
6x3200	6	3200	14-35	20-600	30'-1°30'	7.5	3900x1580x2150
6x4000	6	4000	10-30	20-600	30'-1°30'	7.5	4700x1650x2250
6x5000	6	5000	10-30	20-800	30'-1°30'	11	5700x1800x2380
6x6000	6	6000	8-25	20-800	30'-1°30'	11	6700x2000x2650
8x2500	8	2500	14-30	20-600	30'-2°	11	3200x1550x2150
8x3200	8	3200	12-30	20-600	30'-2°	11	3950x1750x2350
8x4000	8	4000	10-25	20-600	30'-2°	11	4700x1800x2480
8x5000	8	5000	10-25	20-800	30'-2°	15	5700x1950x2600
8x6000	8	6000	8-20	20-800	30'-2°	15	6700x1980x2650
12x2500	12	2500	12-25	20-800	30'-2°	15	3250x1680x2250
12x3200	12	3200	12-25	20-800	30'-2°	15	3980x1800x2550
12x4000	12	4000	8-20	20-800	30'-2°	15	4800x1950x2650
12x5000	12	5000	8-20	20-1000	30'-2°	22	5800x2150x2700
12x6000	12	6000	6-20	20-1000	30'-2°	30	6800x2450x2900
16x2500	16	2500	12-20	20-800	30'-2°30'	22	3280x1830x2520
16x3200	16	3200	12-20	20-800	30'-2°30'	22	3950x1950x2650
16x4000	16	4000	8-15	20-800	30'-2°30'	22	4800x1970x2700
16x5000	16	5000	8-15	20-1000	30'-2°30'	30	5800x2250x2870
16x6000	16	6000	6-15	20-1000	30'-2°30'	37	6800x2450x3150
20x2500	20	2500	10-20	20-800	30'-3°	30	4680x2150x2100
20x3200	20	3200	10-20	20-800	30'-3°	30	3400x2260x2520
20x4000	20	4000	8-15	20-800	30'-3°	30	4100x2300x2700
20x5000	20	5000	8-15	20-1000	30'-3°	37	5900x2750x2980
20x6000	20	6000	6-15	20-1000	30'-3°	37	6900x2850x3200
25x2500	25	2500	8-15	20-800	30'-3°30'	37	3420x2400x2650
25x3200	25	3200	8-15	20-800	30'-3°30'	37	4150x2500x2750
25x4000	25	4000	6-12	20-1000	30'-3°30'	37	4900x2600x2950
30x2500	30	2500	6-12	20-1000	30'-4°	55	3450x2600x2750
30x3200	30	3200	8-12	20-1000	30'-4°	55	4150x2700x2850
30x4000	30	4000	8-12	20-1000	30'-4°	55	4900x2900x3100
40x2500	40	2500	4-10	20-1000	30'-4°	55	4000x2950x3150
40x3200	40	3200	4-10	20-1000	30'-4°	55	4900x3050x3680

Sorry for no notice if parameter will change!

Q11 MECHAICAL SHEARING MACHINE

Technical parameters

Item			(Upper transmisson)mechanical shears							(Lower transmisson)mechanical shears				
			Q11-6x2000	Q11-8x2000	Q11-6x2500	Q11-8x2500	Q11-13x2500	Q11-16x2500	Q11-20x2500	Q11-3x1300	Q11-3x1500	Q11-4x2000	Q11-4x2500	Q11-6.3x2000
Max cutting thickness		mm	6	8	6	8	13	13	20	3	3	4	4	6.3
Max cutting width		mm	2000	2000	2500	2500	2500	2500	2500	1300	1500	2000	2500	2000
Sheet strength		Mpa	≤500	≤500	≤500	≤500	≤500	≤500	≤470					≤500
Throt depth		mm	210	210	210	210	250	250	300	210	210	210	210	210
Shear angle			2°30'	2°30'	2°30'	2°30'	3°	3°	3°	2°25'	2°25'	2°30'	2°	2°
Cutting times for every minute		min^{-1}	10	10	10	10	11	11	6					
Travel times		min^{-1}	37	37	37	37	30	30	20	20	20	20	20	24
Flywheel speed		r/min	335	335	335	335	970	970	980					
Binder force		KN	15	18	15	18	25	30	96					
Column distance		mm	2040	2040	2540	2540	2540	2540	2622					
Max distance for backgauge		mm	460	460	460	460	460	460	800	350	350	500	500	500
Blades length		mm	2032	2032	2540	2540	2540	2540	2550					
Workbench distance from the ground		mm	650	650	650	650	680	680	675					905
Electric motor	Model		Y160M-6	Y160L-6	Y160M-6	Y160L-6	Y180L-6	Y220L2-6	Y225M-6					
	Power	KW	7.5	11	7.5	11	15	22	30	3	3	5.5	5.5	7.5
	Speed	r/min	970	970	970	970	970	970	980					
Dimensions	Length	mm	3050	3050	3550	3550	3590	3590	3749	2115	2515	3200	3580	3175
	Width	mm	2170	2170	2170	2170	2160	2160	3574	1500	1500	1300	1300	1765
	Height	mm	2115	2115	2115	2115	2440	2440	2590	1400	1400	1610	1610	1530

Sorry for no notice if parameter will change!

Q11D ELECTRIC SHEARING MACHINE

Technical parameters

Model	Shearing Thickness	Max Shearing Length	Materail Strength	Shearing Angler	Stroke Times	Reducer Speed Ratio	Motor			Dimension			Weight
							Power	Voltage	Rotay Speed	Length	Width	Height	
	mm	mm	N/mm^2	°, ′	min^{-1}		kw	v	rpm	mm	mm	mm	kg
4x1300	0.2-4	1300	≤450	2°30‘	22	43:1	5.5	380	1440	1800	1300	1400	1900
4x1600	0.2-4	1600	≤450	2°30‘	22	43:1	5.5	380	1440	2100	1150	1400	2100
4x3200	0.5-4	3200	≤450	1°30‘	19	43:1	7.5	380	1440	3890	1760	1400	4100
4x4000	0.2-4	4000	≤450	1°35‘	19	43:1	15	380	1440	4520	1400	1480	4800
6x1500	0.3-6	1500	≤450	2°30‘	11	43:1	7.5	380	1440	1960	1500	1650	2800
8x2000	1-8	2000	≤450	2°30‘	19	43:1	11	380	1440	2460	1800	1780	4300
12x4000	1-12	4000	≤450	2°	9	59:1	22	380	960	4610	1900	2200	12500
16x2500	1-16	2500	≤450	3°	9	59:1	22	380	960	3100	1750	2065	11500
4x2000	0.2-4	2000	≤450	2°30‘	22	43:1	5.5	380	1440	2600	1350	1400	2200
4x2500	0.2-4	2500	≤450	2°30‘	22	43:1	5.5	380	1440	3100	1350	1400	2800
5x3500	0.2-5	3500	≤450	1°36‘	19	43:1	7.5	380	1440	4100	1370	1400	4600
6x2500	0.3-6	2500	≤450	2°	19	43:1	15	380	1440	2960	1800	1780	4400
6.3x2000	0.5-6.3	2000	≤450	2°30‘	22	43:1	7.5	380	1440	2600	1150	1400	2800
8x2500	0.3-8	2500	≤450	2°	19	43:1	15	380	1440	2960	1800	1780	4600
12x2000	1-12	2000	≤450	3°	22	23:1	22	380	1440	2460	1800	1950	6500

Sorry for no notice if parameter will change!

TEL: +86-25-57269018 FAX: +86-25-57260217 E-MAIL: info@harsle.com

J21S DEEP-THROAT POWER PRESS

Technical parameters

Item		Unit	J21S-10T	J21S-16T	J21S-25T	J21S-40T	J21S-63T	J21S-80T	J21S-100T	J21S-125T	J21S-160T
Nominal Force		KN	100	160	250	400	630	800	1000	1250	1600
Slide Stroke		mm	50	60	70	100	100	115	130	130	130
Number of Stroke		Times/min	140	100	70	50	50	45	38	40	35
Closed Height		mm	200	250	290	380	380	410	590	420	410
Closed Height Adjustment		mm	40	40	40	60	60	60	100	60	80
Throat Depth		mm	420	500	500	500	500	500	500	500	500
Column Distance		mm	170	200	230	320	350	360	400	430	330
Table Size	Front and back	mm	230	280	330	420	450	500	600	650	600
	Left and right	mm	370	450	530	640	700	750	900	1000	980
Slide Bottom Size	Front and back	mm	100	130	170	190	220	250	280	350	340
	Left and right	mm	145	180	200	250	310	300	425	380	420
Shouk Dimension	Diameter	mm	30	35	40	50	50	60	60	70	80
	Depth	mm	50	60	60	100	100	100	100	100	110
Thickness of Table		mm	30	40	45	70	80	90	100	110	110
Dimension	Front and back	mm	1200	1400	1600	1800	1900	1790	2100	2200	2100
	Left and right	mm	600	780	830	1100	1200	1300	1300	1500	1600
	Height	mm	1500	1720	1950	2300	2400	2600	2650	2800	2900
Motor		kw	1.5	2.2	2.2	3.0	4.0	7.5	7.5	11	15
Weight		kg	450	700	1400	2800	3700	4800	5900	8300	11000

Sorry for no notice if parameter will change!

J23 POWER PRESS

Technical parameters

Item		Unit	J23-6.3T	J23-10T	J23-16T	J23-25T	J23-40T	J23-63T	J23-80T	J23S-100T	J23-125T	J21S-160T
Nominal Force		KN	63	100	160	250	400	630	800	1000	1250	1600
Slide Stroke		mm	35	50	60	70	100	100	115	130	130	130
Number of Stroke		Times/min	150	140	100	70	50	50	45	38	40	35
Closed Height		mm	200	200	250	290	380	380	410	590	420	410
Closed Height Adjustment		mm	30	40	40	40	60	60	60	100	60	80
Throat Depth		mm	130	130	180	200	250	280	280	320	320	360
Column Distance		mm	160	170	200	230	320	350	360	400	430	330
Table Size	Front and back	mm	200	230	280	330	420	450	500	600	650	600
	Left and right	mm	350	370	450	530	640	700	750	900	1000	980
Slide Bottom Size	Front and back	mm	140	100	130	170	190	220	250	280	350	340
	Left and right	mm	140	145	180	200	250	310	300	425	380	420
Shouk Dimension	Diameter	mm	30	30	35	40	50	50	60	60	70	80
	Depth	mm	45	50	60	60	100	100	100	100	100	110
Thickness of Table		mm	30	30	40	45	70	80	90	100	110	110
Dimension	Front and back	mm	700	740	900	1000	1400	1500	1600	1800	1900	1800
	Left and right	mm	550	600	780	830	1100	1200	1300	1300	1500	1600
	Height	mm	1450	1500	1720	1950	2300	2400	2600	2650	2800	2900
Motor		kw	1.1	1.5	2.2	2.2	3.0	4.0	7.5	7.5	11	15
Weight		kg	300	350	700	1100	2400	3100	4000	5000	7300	9600

Sorry for no notice if parameter will change!

TEL: +86-25-57269018 FAX: +86-25-57260217 E-MAIL: info@harsle.com

JH21 PNEUMATIC PUNCHING MACHINE

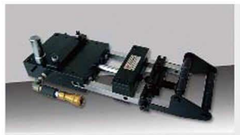

Air feeder

Servo feeder

Uncoiler leveller

3 in 1 feeding system

Technical parameters

Specifications		R	Unit	JH21-25	JH21-45	JH21-60	JH21-80	JH21-100	JH21-125	JH21-160	JH21-200	JH21-250	JH21-315	JH21-400
Nominal Capacity		Pe	KN	250	450	600	800	1000	1250	1600	2000	2500	3150	4000
Nominal		Sp	mm	3	4	4	5	5	6	6	6	6	7	8
Slide Stroke		S	mm	80	120	140	160	160	180	200	220	220	220	250
Slide Stroke Per Minute	Fixed	n	Times/min	100	80	70	60	55	50	45	45	30	30	30
	Variable		Times/min	60-100	50-80	45-70	40-60	40-70	35-50	30-45	25-45	20-30	20-30	20-30
Maxium Die Set Height		H2	mm	250	270	300	320	335	350	400	450	500	500	550
Die Height Adjustment		t	mm	50	60	70	80	90	90	100	110	120	120	120
Throat Depth		C1	mm	210	225	270	310	330	350	400	430	450	450	450
Distance Between Uprights		d1	mm	450	515	560	610	670	670	736	910	980	980	1050
Slide Bottom Size	L X R	a	mm	360	410	480	540	620	620	700	880	950	950	1020
	F X B	b	mm	250	340	400	460	520	520	580	650	700	700	750
Bolater Thickness	Dia	d	mm	40	50	50	50	70	70	70	70	70	70	70
	Depth	l	mm	65	60	70	65	90	90	100	100	130	130	130
Bolater Size	L X R	C	mm	720	825	930	950	1060	1100	1175	1390	1500	1540	1700
	F X B	D	mm	400	440	520	600	640	680	760	840	880	880	950
Blanking Hole Diameter		Φ	mm	150	150	150	180	180	200	220	250	270	270	290
Bolster Thickness		H3	mm	80	110	130	140	145	155	165	180	190	190	210
Bolster Surface Height		H1	mm	780	800	900	900	900	900	900	1000	1000	1000	1100
Overall Dimensions	F X B	A	mm	1496	1585	1540	1765	2000	2040	2305	2600	2660	2720	2850
	L X R	B	mm	945	1075	1200	1200	1300	1320	1420	1540	1640	1680	1750
	H	H	mm	2120	2391	2570	2725	3010	3035	3215	3800	3850	3850	4140
Distance Between Foundation Bolts	F X B	a'	mm	980	1075	1100	1210	1365	1430	1665	2020	2100	2140	2185
	L X R	b'	mm	690	760	840	920	1020	1040	1140	1360	1460	1500	1570
Motor Power			KW	3	5.5	5.5	7.5	7.5	11	15	18.5	22	30	37
Weight(Approximate)			Kg	2450	3550	5150	6450	8650	9550	13600	19200	23200	26600	29500
Press Pressure			Mpa	0.5										

Sorry for no notice if parameter will change!

STEEL DOOR EMBOSSING MACHINE

Technical parameters

Item		Unit	Y32 Door Emboossing Machine					
			6000T	4500T	3600T	3000T	2500T	2000T
Nominal Capacity		KN	60000	45000	36000	30000	25000	20000
Return Force		KN	500	435	435	435	425	425
Max.Pressure of Main Cylinder		Mpa	25	25	25	25	25	25
Ram Stroke		mm	500	500	500	500	500	500
Max.Opening Height		mm	600	600	600	600	600	600
Stroke Speed of Slide	Descent	mm/s	100-120	100-120	100-120	100-120	100-120	100-120
	Pressing	mm/s	8-12	8-12	8-12	8-12	8-12	8-12
	Reture	mm/s	100-120	100-120	100-120	100-120	100-120	100-120
Dimension of Working Table	Left-Right	mm	2100	2000	1600	1500	1500	1480
	Front-Back	mm	4000	3000	2600	2500	2500	2500
Motor Power		KW	110	100	90	60	52	44

Sorry for no notice if parameter will change!

TEL: +86-25-57269018 FAX: +86-25-57260217 E-MAIL: info@harsle.com

Y27 SINGLE ACTION SHEET DRAWING HYDRAULIC PRESS

Features

- The machine can be controlled by manual, adjust, semi-automatic. It is specially used for deep drawing work pieces.
- Four-column structure is simple, economic, practical.
- The hydraulic system adopts integrated cartridge valve system, it can decrease the oil leakage and improve the stability and working lifetime.
- Hydraulic working pressure can be adjusted according the processing requirement within the reasonable range.
- Independent console can protect the worker working in safe range and it is functional for the working process.

Optional configuration

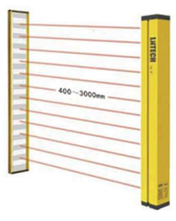

Light Curtain

Knockout Cylinder

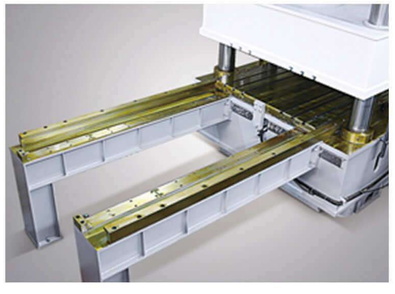

Shuttle Table

Touch Screen

Cooling System

Servo Pump Control System

HARSLE

Technical parameters

Item		Unit	Y27-200	Y27-250	Y27-315	Y27-400	Y27-400A	Y27-500	Y27-500A	Y27-500B	Y27-630	Y27-630A
Nominal force		KN	2000	2500	3150	4000	4000	5000	5000	2500x2	6300	3150x2
Return force		KN	240	400	600	500	500	900	900	400	850	600x2
Working pressure		Mpa	25	25	25	25	25	25	25	25	25	25
Cushion pressure		KN	400	400	630	1000	1000	1600	2000	1000	2500	1250x2
Cushion return force		KN	250	320	360	360	360	780	780	320x2	720	360x2
Daylight of slide		mm	1120	1120	1250	1250	1250	1500	1500	1500	1500	1500
Stroke	Upper slide	mm	710	710	800	800	800	900	900	900	900	900
	Cushion	mm	250	250	300	300	300	350	350	350	350	350
Table size	L-R	mm	1000	1100	1260	1250	1750	1400	2200	2200	1600	2500
	F-B	mm	940	1100	1160	1250	1250	1400	1600	1600	1600	1800
Cushion size	L-R	mm	660	700	820	820	1270	970	1720	1720	1120	2020
	F-B	mm	600	600	700	820	820	900	1120	1120	1120	1270
Speed of slide	Descent	mm/s	150	130	100	130	130	120	150	150	130	140
	Pressing	mm/s	5-12	7-15	5-12	4-10	4-10	7-15	7-15	7-15	5-12	5-12
	Return	mm/s	95	90	60	70	70	80	90	90	85	85
Table hight above floor		mm	700	700	600	600	600	550	550	550	500	500
Overall dimensions	L-R	mm	3100	3250	3100	3150	3700	5800	6600	6600	4150	5100
	F-B	mm	1350	1350	2100	2300	2300	2600	2600	2600	2600	2600
Motor power		KW	15	22	22	22	22	2x22	2x22	2x22	2x22	2x22

Item		Unit	Y27-800	Y27-800A	Y27-1000	Y27-1000A	Y27-1250	Y27-1600	Y27-2000	Y27-2500	Y27-3000
Nominal force		KN	8000	8000	10000	10000	12500	16000	20000	25000	30000
Return force		KN	900	900	1250	1250	1250	2000	2000	2250	2250
Working pressure		Mpa	25	25	25	25	25	25	25	25	25
Cushion pressure		KN	1000	1000	1600	1600	1600	2400	2400	3000	3000
Cushion return force		KN	3000	3000	5000	5000	5000	5000	2500	800	1000
Daylight of slide		mm	1800	1800	1800	2200	1800	2000	2100	2000	2500
Stroke	Upper slide	mm	1200	1200	1000	1500	1000	1200	1300	1100	1600
	Cushion	mm	400	400	365	500	400	400	350	400	400
Table size	L-R	mm	3200	3200	3200	4000	4000	4000	4500	4500	4500
	F-B	mm	2200	2200	2300	2300	2500	2500	2500	2500	2500
Cushion size	L-R	mm	2550	2550	2550	3500	3370	3820	3750	3820	3820
	F-B	mm	1700	1700	1800	1800	1870	1870	1800	1700	1600
Speed of slide	Descent	mm/s	300	300	300	300	350	350	350	350	350
	Pressing	mm/s	8-22	8-22	12-30	12-30	12-30	12-30	12-30	12-30	12-30
	Return	mm/s	200	200	250	250	300	300	300	300	300
Table hight above floor		mm	500	720	900	400	400	400	350	350	350
Overall dimensions	L-R	mm	5400	5400	5400	6200	6200	6200	6700	6700	6700
	F-B	mm	2900	5000	3000	5200	3200	3200	3300	3300	3300
Motor power		KW	96	105	160	160	160	200	380	410	500

Sorry for no notice if parameter will change!

Y32 FOUR-COLUMN HYDRAULIC PRESS

Features

- Low power consumption, high impermeability, better performance.
- Simple machine structure and easy operation.
- Overall safety protection and low-noise design.

Application fields

- This hydraulic press is widely used in the metal working pressing, bending, cutting, punching, forming and straightening. It is also used in big capacity pressing jobs which can get better result than other normal press.

Optional configuration

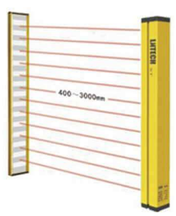

Light Curtain

Knockout Cylinder

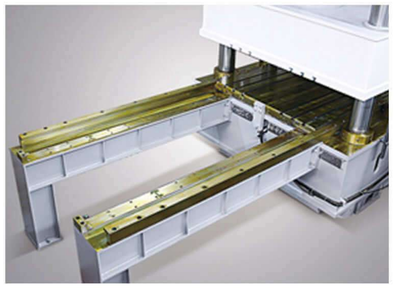

Shuttle Table

Touch Screen

Linear Position Sensor

Servo Pump Control System

Technical parameters

Item		Unit	Y32-63T	Y32-100T	Y32-160T	Y32-200T	Y327-250T	Y32-315T	Y32-400T	Y32-500T
Nominal force		KN	630	1000	1600	2000	2500	3150	4000	5000
Knockout force		KN	160	250	250	400	630	630	630	1000
Daylight		mm	800	800	1000	1120	1120	1250	800	1500
Slide stroke		mm	500	500	650	710	710	800	800	900
Knockout stroke		mm	200	200	200	250	250	300	360	360
Speed of slide	Descent	mm/s	40	70	40	80	>150	120	100	>100
	Pressing	mm/s	7	15	8	5-12	6-15	5-12	4-10	4-10
	Return	mm/s	580	100	65	70	>150	65	70	50
Table size	L-R	mm	550	630	800	900	2500	1200	1200	1400
	F-B	mm	630	1630	800	900	1400	1200	1200	1400
Table hight above floor		mm	700	700	550	550	650	700	600	500
Overall dimensions	L-R	mm	2370	2370	1150	3200	5400	3180	3785	4070
	F-B	mm	900	900	800	900	1500	1200	1200	1648
	Hight above floor	mm	2770	2770	2600	4085	4740	4570	4667	5348
Motor power		KW	7.5	7.5	11	15	15	22	22	30

Item		Unit	Y32-630T	Y32-800T	Y32-1000T	Y32-1250T	Y327-1600T	Y32-2000T	Y32-2500T	Y32-3000T
Nominal force		KN	6300	8000	10000	12500	16000	20000	25000	30000
Knockout force		KN	1600	2000	2000	2000	2500	3150	4000	5000
Daylight		mm	1500	1500	1600	1500	1600	1800	2000	2000
Slide stroke		mm	900	900	1000	900	1000	1200	1200	1200
Knockout stroke		mm	360	360	450	400	450	450	500	500
Speed of slide	Descent	mm/s	>100	>100	>150	>150	>150	>150	>150	>150
	Pressing	mm/s	5-12	5-12	4-10	4-10	4-10	4-10	4-10	5-12
	Return	mm/s	100	90	100	85	>100	160/60	≥100	120
Table size	L-R	mm	2000	2000	2000	2500	2500	3000	3500	4000
	F-B	mm	1600	1600	1800	2000	2000	2500	2500	2600
Table hight above floor		mm	500	300	300	200	200	200	200	200
Overall dimensions	L-R	mm	4390	4800	7010	5890	6500	6870	7630	8530
	F-B	mm	2150	2854	3000	3450	3900	2500/4500	5000	4000
	Hight above floor	mm	5300	5400	5740	6980	7500	7500	7840	8500
Motor power		KW	45	60	75	60	70	90	120	170

Sorry for no notice if parameter will change!

Y41 SINGLE COLUMN HYDRAULIC PRESS

Features

- Good structural rigidity, good guidance quality and fast working speed.
- Convenient manual adjustment mechanism can adjust the upper pressing head or the upper table to press at any position during the stroke, and can also adjust the length of the fast forward and working process at any time within the designed stroke.
- The stable open structure with integral welding can get enough rigid and convenient operating space.

Technical parameters

Item		Unit	Y41-40	Y41-63	Y41-100	Y41-100A	Y41-160	Y41-200	Y41-250	Y41-315	Y41-400	Y41-630	Y41-800	Y41-1000
Nominal force		KN	400	630	1000	1000	1600	2000	2500	3150	4000	6300	8000	10000
Throat depth		mm	280	320	380	450	400	500	500	600	650	750	800	900
The maximum opening height		mm	600	700	700	750	900	1000	1000	1600	1200	1250	1300	1600
Pressure head travel		mm	400	500	500	500	560	600	710	710	710	800	800	1000
Length of worktable	L-R	mm	750	850	950	1300	1100	1200	1200	1400	1400	1800	2000	2500
	F-B	mm	520	600	720	800	750	900	950	1100	1200	1500	1600	1800
Speed of slide	Descent	mm/s	110	130	75	75	75	80	80	80	60	60	120	120
	Pressing	mm/s	9-22	6-14	7-15	7-15	7-15	10	3.7	8	7.5	3	6-12	6-12
	Return	mm/s	110	125	90	90	110	80	80	100	70	70	74	74
Overall dimensions	L-R	mm	1300	1400	1800	2000	1800	2500	1200	1400	1400	1800	2000	2500
	F-B	mm	750	850	950	1300	1100	1200	2000	2300	2600	4500	3500	4000
	Hight above floor	mm	2100	2350	2500	2850	3100	3400	3500	3750	3800	4000	6000	4900
Table hight above floor		mm	580	600	600	650	700	700	700	600	600	500	500	400
Motor power		KW	5.5	5.5	7.5	7.5	15	22	22	37	37	37	55	55

Sorry for no notice if parameter will change!

YL GANTRY HYDRAULIC MACHINE

Technical parameters

Model	Nominal pressure	System pressure	Stroke	Rate of decline	Return speed	Table	Motor
YL-100TK	1000KN	25Mpa	350	16mm/s	20mm/s	440x650	7.5KW
YL-100T	1000KN	25Mpa	350	6mm/s	8mm/s	440x650	7.5KW
YL-60TK	600KN	30Mpa	350	45mm/s	60mm/s	400x490	7.5KW
YL-60T	600KN	30Mpa	350	6mm/s	8mm/s	400x490	2.2KW
YL-40TK	400KN	30Mpa	350	45mm/s	60mm/s	400x460	7.5KW
YL-40T	400KN	30Mpa	350	6mm/s	8mm/s	400x460	2.2KW
YL-20TK	200KN	25Mpa	350	40mm/s	50mm/s	360x400	4KW
YL-20T	200KN	25Mpa	350	15mm/s	23mm/s	360x400	2.2KW

Sorry for no notice if parameter will change!

TEL: +86-25-57269018 FAX: +86-25-57260217 E-MAIL: info@harsle.com

CNC FIBER LASER CUTTING MACHINE

Features

- Equipped with word famous laser tool which features high Electro-optical efficiency, saving water and no maintenance, it can save more future cost and improve working efficiency..
- Machine body adopts gantry type structure which features high damped body, high rigidity, high precious, stable working condition. The roller balls on the table which can achieve easy feeding material and working convenience.
- Cellular type welded structure with annealing treatment, secondary aging treatment, precision processing on large gantry milling machine can ensure the machine has better seismicity, rigidity, stability.

Cutting material

- It is suitable for stainless steel, carbon steel, alloy steel, galvanized steel, nickel titanium alloy, nickel iron alloy, titanium alloy and other metal materials.

Equipment model	HS-3015C/4020C-500	HS-3015C/4020C-800	HS-3015C/4020C-1000
Laser power	500W 700W/750W/800W	1000W 1500W	Customized
Laser wavelength	1070nm	1070nm	1070nm
Plane effective processing of the format	3000mm*1500mm 4000mm*2000mm	6000mm*2000mm	Customized
Maximun positioning speed	120m/min	120m/min	120m/min
Positioning accuracy	≤±0.03mm/m	≤±0.03mm/m	≤±0.03mm/m
Electricity demand	380V/50Hz	380V/50Hz	380V/50Hz
Cooling method	Water cooling	Water cooling	Water cooling

Sorry for no notice if parameter will change!

Technical parameters

		500W	1000W	2000W	3000W	4000W	6000W	80000W
Material	Thickness	speed m/min	speed m/min	speed m/min	speed m/min	speed m/min	speed m/min	speed m/min
Carbon steel	1	8-13	15-24	24-30	30-42	40-55	60-80	70-90
	2	3.0-4.5	5-7.5	5.5-8	7-9	8-10	9-12	10-13
	3	1.8-3.0	2.4-4	3.5-4.8	4-6.5	4.5-6.5	4-7	4-7
	4	1.3-1.5	2-2.4	2.8-3.5	3.5-4.5	4.0-5.0	4.2-5.5	4.7-5.5
	5	0.9-1.1	1.8-2	2.5-3	3-3.5	3.0-4.2	3.5-4.2	3.8-4.5
	6	0.6-0.9	1.4-1.6	1.8-2.6	2.5-3.2	3.0-3.5	3.0-4	3.3-4.2
	8		0.8-1.2	1.2-1.8	1.8-2.6	2.0-3.0	2.2-3.2	2.5-3.5
	10		0.6-1.0	1.1-1.3	1.4-2.0	1.5-2.5	1.8-2.5	2.2-2.7
	12		0.5-0.8	0.9-1.2	1.2-1.6	1.4-2	1.6-2	1.8-2.1
	14			0.7-0.8	0.9-1.4	1.0-1.6	1.5-1.8	1.7-1.9
	16			0.6-0.7	0.8-1.2	0.8-1.2	0.8-1.5	0.9-1.7
	18			0.4-0.6	0.7-1	0.8-1.1	0.9-1.2	0.9-1.2
	20				0.6-0.8	0.7-1	0.8-1.1	1.0-1.5
	22				0.4-0.6	0.6-0.8	0.7-0.9	0.9-1.0
	25					0.3-0.5	0.4-0.6	0.5-0.7
Stainless steel	1	8-13	18-25	24-30	30-42	40-55	60-80	70-90
	2	2.4-5.0	7-12	10-17	18-21	30-42	30-42	40-55
	3	0.6-0.8	1.8-2.5	4-6.5	8-12	12-18	18-24	30-38
	4		1.2-1.3	3-4.5	6-9	8-12	10-18	18-24
	5		0.6-0.7	1.8-2.5	3.0-5.0	4-6.5	8-12	12-17
	6			1.2-2.0	3.0-4.3	4.0-6.5	6-9	8-14
	8			0.7-1	1.5-2.0	1.8-3.0	4-5	6-8
	10				0.8-1	0.8-1.5	1.8-2.5	3-5
	12				0.5-0.8	0.6-1.0	1.2-1.8	1.8-3
	15					0.5-0.8	0.6-0.8	1.2-1.8
	20					0.4-0.5	0.5-0.8	0.6-0.7
	25						0.4-0.5	0.5-0.6
	30							0.4-0.5
Aluminum	1	4-5.5	6-10	20-25	25-40	40-55	55-65	80-90
	2	0.7-1.5	2.8-3.6	7-10	10-18	15-25	25-35	35-50
	3		0.7-1.5	4-6	7-10	10-15	13-18	21-30
	4			2-3	4-5.5	8-10	10-12	13-18
	5			1.2-1.8	3-4	5-7	6-10	9-12
	6			0.7-1	1.5-2.5	3.5-4	4-6	4.5-8
	8				0.7-1	1.5-2	2-3	4-6
	10				0.5-0.7	1-1.5	1.5-2.1	2.2-3
	12					0.7-0.9	0.8-1.4	1.5-2
	15					0.5-0.7	0.7-1	1-1.6
	20						0.5-0.7	0.7-1
	25							0.5-0.7
Brass	1	4-5.5	6-10	14-16	25-35	35-45	50-60	70-85
	2	0.5-1.0	2.8-3.6	4.5-6.5	10-15	10-15	25-35	30-40
	3		0.5-1.0	2.5-3.5	5-8	7-10	12-18	15-24
	4			1.5-2	3.5-5.0	5-8	8-10	9-15
	5			1.4-1.6	2.5-3.2	3.5-5.0	6-7	7-9
	6				1.2-2.0	1.5-2.5	3.5-4.5	4.5-6.5
	8				0.7-0.9	0.8-1.5	1.6-2.2	2.4-4
	10					0.5-0.8	0.8-1.4	1.5-2.2
	12						0.6-0.8	0.8-1.5
	16							0.6-0.8

Sorry for no notice if parameter will change!

CLOSED TYPE CNC FIBER LASER CUTTING MACHINE

Technical parameters

Equipment model	HS-3015A/4020A				HS-4020A/6020A		
Laser power	1000W	2000W	3000W	4000W	6000W	8000W	Customized
Laser wavelength	1070nm		1070nm		1070nm		1070nm
Effective processing format	3000mm*1500mm 4000mm*2000mm 4000mm*1500mm 6000mm*2000mm 6000mm*1500mm						Customized
Maximun positioning speed	120m/min		120m/min		120m/min		120m/min
Positioning accuracy	≤±0.03mm/m		≤±0.03mm/m		≤±0.03mm/m		≤±0.03mm/m
Electricity demand	380V/50Hz		380V/50Hz		380V/50Hz		380V/50Hz
Cooling method	Water cooling		Water cooling		Water cooling		Water cooling

Sorry for no notice if parameter will change!

Festures

- Equipped with word famous laser tool which features high Electro-optical efficiency, saving water and no maintenance, it can save more future cost and improve working efficiency.
- Machine body adopts gantry type structure which features high damped body, high rigidity, high precious, stable working condition. The roller balls on the table which can achieve easy feeding material and working convenience.
- Cellular type welded structure with annealing treatment, secondary aging treatment, precision processing on large gantry milling machine can ensure the machine has better seismicity, rigidity, stability.
- Originally imported Bilaterally gear, rack linear guide and dual-drive motors can ensure the cutting speed and precious.
- Exchange table can improve the working efficiency very much.

Cutting Material

- It is suitable for stainless steel, carbon steel, alloy steel, galvanized steel, nickel titanium alloy, nickel iron alloy, titanium alloy and other metal materials.

Cutting Samples

TEL: +86-25-57269018 FAX: +86-25-57260217 E-MAIL: info@harsle.com

Q35Y HYDRAULIC IRONWORKER

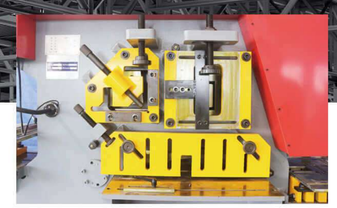

Features

●Using hydraulic transmission, China's currently latest Multi-function United punching machine products, can plate steel, square steel, round steel, angle steel, channel steel, I-beam to cut, punch, shear modulus and equipped with shear block device.

Technical parameters

I-beam and channel steel, it would take special orders

Profile	Round Bar	Square Bar	Equal Angle		T-Bar		Joist	Channel
			90° Shearing	45° Shearing	90° Shearing	45° Shearing		
Section View								
Q35Y-12	35	30x30	100x100x8				10#	10#
Q35Y-16	45	40x40	120x120x12	70x70x8	120x120x12	60x60x8	126x74x5	126x53x5.5
Q35Y-20	50	45x45	140x140x12	70x70x10	140x140x12	70x70x10	160x86x6	160x60x6.5
Q35Y-25	60	50x50	160x160x14	80x80x7	160x160x14	80x80x10	200x102x9	200x75x9
Q35Y-30	65	55x55	180x180x16	80x80x10	180x180x16	80x80x10	280x124x10.5	280x86x11.5
Q35Y-40	70	60x60	200x200x18	100x100x10	200x200x18	80x80x10	300x126x11	300x89x12
Q35Y-50	80	65x65	200x200x20	120x120x16	200x200x18	80x80x10	320x130x10	320x92x12

Model	Punching Pressure (T)	Max.cutting thickness of steel plates (mm)	Plate strength (N/mm²)	Angle of shear (°)	A trip size TxW(mm)	Slider trip (mm)	Trips frequency (times/min)	Throat depth (mm)	Punch depth (mm)	Max punching diameter(mm)	Main Motor Powe(KW)	Overall dimensions LxWxH(mm)
Q35Y-12	50	12	≤450	7°	300x12	35	10-18	115	12	25	4	950x550x1800
Q35Y-16	60	16	≤450	7°	16x250 8x400	80	9-25	300	16	25	5.5	1640x730x1770
Q35Y-20	90	20	≤450	8°	20x330 10x480	80	12-28	355	20	30	7.5	1860x800x1900
Q35Y-25	120	25	≤450	8°	25x330 16x600	80	12-28	400	25	35	11	2355x960x2090
Q35Y-30	160	30	≤450	8°	30x335 20x600	80	12-28	600	28	28	11/15	2680x1040x2300
Q35Y-40	200	40	≤450	8°	35x400 25x700	80	10	600	35	40	15/18.5	2910x1240x2350
Q35Y-50	250	50	≤450	8°	40x400 30x750	80	10	600	40	40	18.5/22	3000x1440x2450

Sorry for no notice if parameter will change!

HYDRAULIC NOTCHING MACHINE

QF28Y Fixed Angle Hydraulic Notching Machine

Technical parameters

Model	Cutting thickness (mm)		Cutting length (mm)	Cutting angle (°)	Stroke time (times/min)	Worktable height (mm)	Motor power (KW)	Dimension (mm)			Weight (kg)
	MS	SS						Length	Width	Height	
3x200	0.5-3.0	0.5-1.5	200	90°	≥40	820	3	810	720	980	590
4x250	0.5-4.0	0.5-2.0	250	90°	≥35	850	4	910	760	1050	680
6x250	0.5-6.0	0.5-3.0	250	90°	≥35	850	4	910	810	1050	710
8x300	1.0-8.0	1.0-4.0	300	90°	≥30	900	5.5	950	820	1150	850
10x300	1.0-10	1.0-5.0	300	90°	≥25	900	5.5	1020	910	1190	1120

Sorry for no notice if parameter will change!

Features

●Blade gap automatic adjusting device according to the shear plate thickness
●Adopting hydraulic transmission type
●Fixed shear Angle of 90 degrees
●Adjustable Angle scale device
●The whole machine for steel plate overall welding structure
●Centralized lubrication system

QX28Y Adjustable Angle Hydraulic Notching Machine

Technical parameters

Model	Cutting thickness (mm)		Cutting length (mm)	Cutting angle (°)	Stroke time (times/min)	Worktable height (mm)	Motor power (KW)	Dimension (mm)			Weight (kg)
	MS	SS						Length	Width	Height	
4x200	0.5-4.0	0.5-2.0	200	40°-135°	≥35	850	3	890	870	1080	860
6x220	0.5-6.0	0.5-3.0	220	45°-135°	≥30	850	4	950	920	1150	970

Sorry for no notice if parameter will change!

Features

●Blade gap automatic adjusting device according to the shear plate thickness
●Machine, electricity, liquid franchising shear Angle adjusting mechanism

TEL: +86-25-57269018 FAX: +86-25-57260217 E-MAIL: info@harsle.com